Biomedical Instrumentation Major Concentration

(33 – 34 cr.)

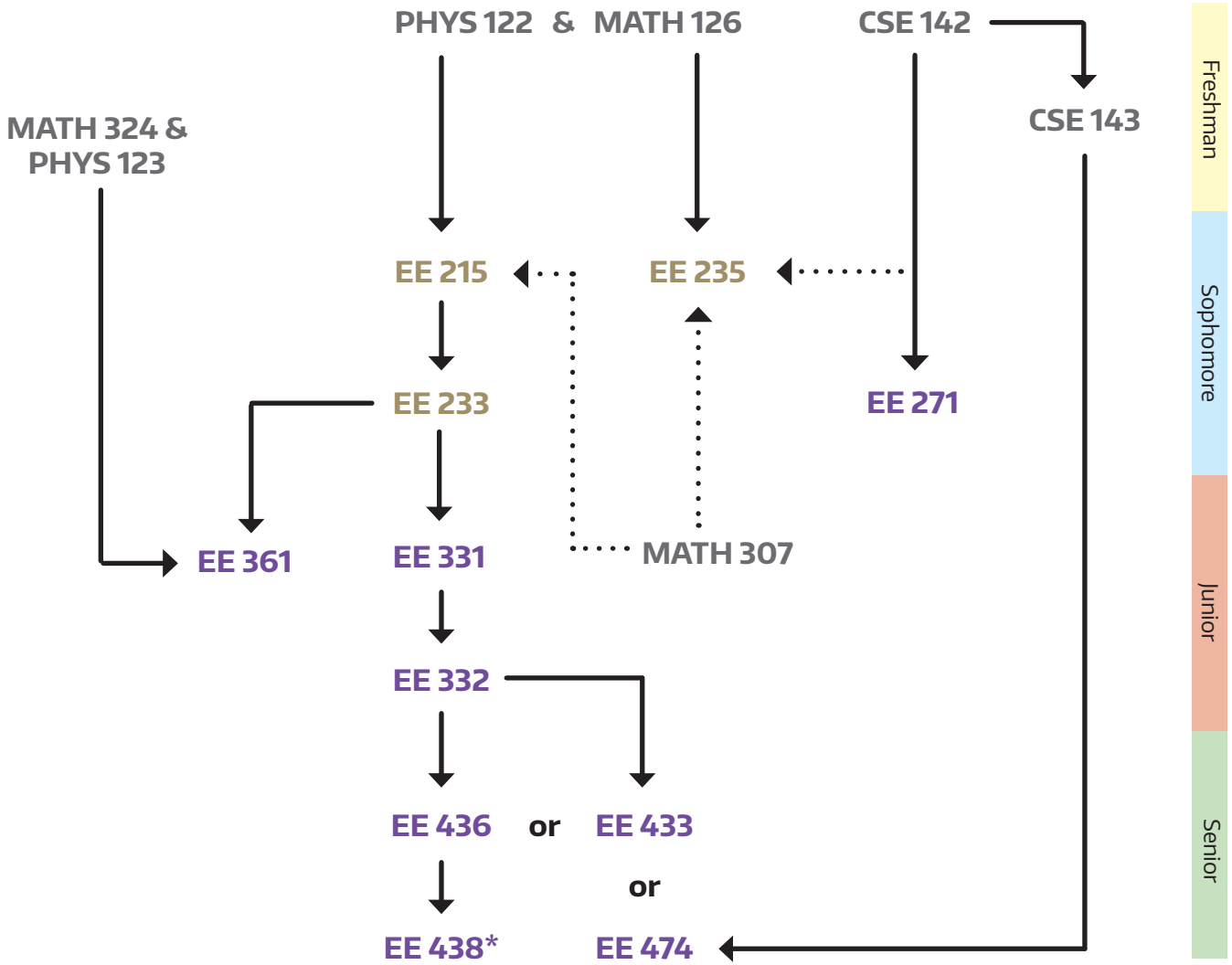

Math & Programming

EE Core

Concentration

Prerequisite

Concurrent Prerequisite

*Capstone Course

Major Requirements

10 cr.	Approved Non-EE Electives
8-9 cr.	Free Electives
15 cr.	EE Electives
10 cr.	Engineering Electives
One of	STAT 390, STAT 391, STAT 394, IND E 315

ELECTRICAL & COMPUTER ENGINEERING